Technical Description

*i*_Space 1.5T

Super-Conductive MRI System

Beijing Wandong Medical Technology Co., Ltd.
Building 3, No.9, Jiuxianqiaodong Road, Chaoyang District, Beijing 100015, P.R. China
E-mail: international@wandong.com.cn Tel/Fax: +86-10-84575792/3/5, 84575794

Table of Contents

WDM: A successful journey of 63 years

Beijing Wandong Medical Technology Co., Ltd. (WANDONG, originally Beijing Wandong Medical Equipment Co., Ltd.) was established in 1955, and has been listed on the Shanghai Stock Exchange since 1997. Headquartering in High-Tech industrial park in Beijing, Wandong occupies an area of more than 100,000 square meters as its modern production base and R&D center, and has 30+ branches in China and a wide sales and service network in about 70 countries all over the world. With the 60 years dedication to the medical imaging, Wandong has made brand name of "WDM", a well-known brand in the world.

As one of the largest radiology imaging equipment manufacturers in the world, Wandong has wide range of product lines including General Radiography, Mobile X-ray & C-arm, Digital Radiography (DR), Digital Fluoroscopy (DRF), Digital Mammography, Cath-Lab, Computed Tomography (CT) and Magnetic Resonance Imaging (MRI) machine, and the annual production capability is more than 6,000 units.

Milestones for Wandong MRI:

→1995 Cooperated with SHIMADZU in 0.5T Super-Con. MRI
→2000 R&D work redirected to Open Permanent MRI
→2002 Established R&D center with experts and subject elites
→2003 Established research Lab. in Peking University
→2004 i_Open 0.36T MRI launched into market
→2005 i_Open 0.36T CE & FDA approved and entered into US market
→2006 Development of 0.4T MRI
→2007 Development of 0.5T MRI
→2008 0.4T MRI launched into market with CE & FDA approval
Started development of Super-Con 1.5T MRI
→2009 0.5T MRI launched into market with CE & FDA approval
→2012 i_Magnate 1.5T MRI released in CMEF Shenzhen on 17th April 2012
0.36T MRI got ACR accreditation in the US
→2014 1.5T MRI released into international market
→2015 Permanent MRI for veterinary use launched into market
WANDONG launched full digital optical fiber spectrometer
→2017 Reddot award for product design
i_Space 1.5T MRI approved CE
→Today WANDONG installed up to 500 MRI machine in Chinese and overseas market, and we are confident to serve customer with quality product and excellent services all over the world.

General description of the product

The i_Space 1.5T system is a medical diagnostic magnetic resonance system. The system composed by 1.5T Super-Conductive magnet, patient table, 8 channels spectrometer, gradient system, digital RF transmitting & receiving system and imaging workstation.

Why do we suggest WDM 1.5T system?

1. ***Advanced design of magnet, which features "zero" helium boil-off, short bore and high homogeneity (please refer to the magnet specification).***
2. ***Optical fiber transmitting minimizes loss of signal and greatly increase SNR.***
3. ***Mobile device remote control and review (Optional).***
4. ***Total overseas installation of MRI more than 80 sets.***

Hardware Description

Magnet

Brand new i_Space 1.5T magnet presents the latest technology of short bore and “zero” helium boil-off. 60cm open bore design combining with ultra-short bore length of 150cm will effectively relieve patient from anxiety and emotional distress. Very low helium consumption will save huge cost of maintenance.

- Field Strength: 1.5T
- Type: Super-Conductive
- Magnetic Field Stability: ≤0.10ppm/hour
- Weight: 4000 Kg
- Homogeneity 40cm DSV Vrms ≤0.25ppm
- Bore Length: 158 cm
- Bore Diameter: 60 cm
- Shimming: Active + Passive
- 5-G Field: 4 meters (axial), 2.5 meters (radial)
- Chamber Volume: Approx. 1200 Litters
- Cycle to Refill Helium: no less than 3 years

Patient table

The patient table is used for positioning the patient with corresponding RF receiving coils to the iso-center of the magnet for the scanning of MR.

The patient table unit includes two parts: patient table and positioning system.
The fully automatic patient table is easy for patient to access and positioning.
Laser positioning system combined with LCD display screen, helps doctor to position patient simply and quickly.

- Max. Patient Weight: 200kg
- Tabletop longitudinal moving range: 215cm
- Tabletop vertical moving range: 33cm
- Positioning accuracy: ±0.5mm

Gradient System

The i_Space 1.5T gradient system is state-of-the-art with active shielding and water cooling technology. Independent water circulation cooling primary and secondary coils ensure high performance and low power consumption.

- Gradient Strength: 33 mT/m (single axial)
- Slew Rate: 132 mT/m/ms
- Minimum Climbing Time: ≤0.2 ms
- Maximum Field of View: 500 mm
- Minimum Field of View: 5 mm
- Minimum 2D thickness: 0.2 mm
- Minimum 3D thickness: 0.1 mm
- Minimum In-plane pixel:0.1mm

Digital RF system

The flat quadrature transmitter coil is integrated in the pole pieces providing a strong uniform field. The 20 kW RF power amplifier allows short pulses to be used, ensuring the execution of fast imaging sequences available now and those of the future.

- Operating Frequency: 63.87MHz
- Transmitting Power: 20KW
- Acquisition Band Width: 1MHz

Phase Array RF Coils

The i_Space 1.5T RF coils provide excellent signal to noise ratio, due to presence of low noise pre-amplifiers in all elements of the coils and other receiver coils, ensuring proper enhancement of the signal. Intelligent Coil Identification System makes sure the connected coil is in normal condition.

- Coil Design: Phase Array coil
- RF Coils: 6 independent receiving coils
  Head Coil
  Cervical Coil
  Body Flexible Coil
  Flat Lumbar Spine Coil
  Knee Coil
  Shoulder Coil

- **8-channel Head Coil**

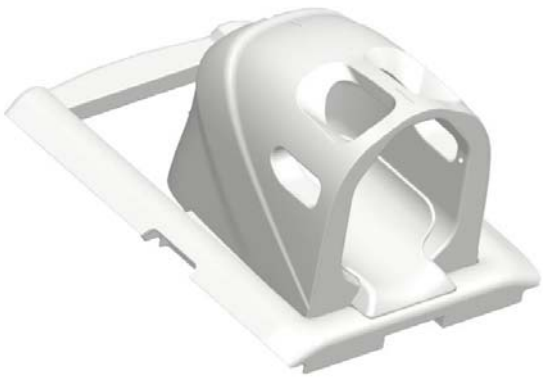

  - External Dimensions: L--650mm, W--440mm, H--350mm
  - Integrated design, non-contact point, which effectively avoid insertion of hair or clothes into the contact points, to ensure the successful scan. Faster positioning, more endurable.
  - Concave head support improves patient comfort and ensures positioning accuracy.
  - The bottom frame fits for the tabletop, to ensure the coil can be well placed at the iso-center of magnetic field.

- **8-channel neck-thorax conjunction coil**

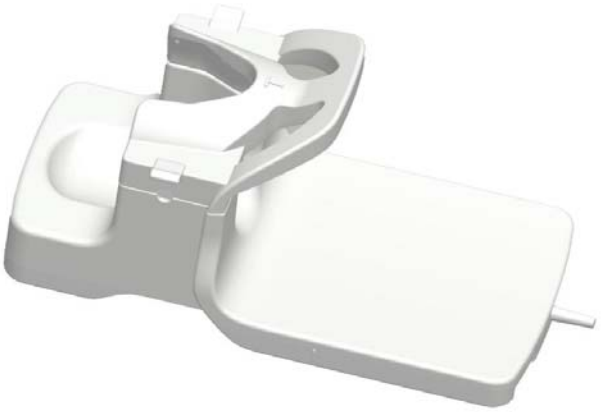

- External dimensions: L--720mm, W--385mm, H--340mm
- The coil design well considered the whole scan of the cervicothoracic spine. The coil can provide volume imaging of the whole C-spine and cover most of the imaging of the thoracic spine.
- Accurate positioning the number of thoracic vertebrae from pilot scan.

- **8-channel flexible body coil**

- External dimensions: L--580mm, W--570mm, H--120mm
- Hard bottom flexible coil design which is with WDM invention patent, equipped with long endurable flexible belt, acquiring high reliability of fixed coil as well as better fitness of flexible coil.
- Flexible coil integrated encapsulation technology.
- Non-contact point, greatly improves workflow and enhances patient flow.

- **8-channel flat coil for spine**

  - External Dimensions: L--580mm, W--480mm, H--80mm
  - Designed for L-spine and T-spine imaging and is unique in patient access and comfort.
  - Outstanding imaging sensitivity of spinal region.
  - Comparing to the flexible coil imaging, the flat coil can acquire spinal image with higher definition, and the structure of the cauda equina can be observed clearly.

- **8-channel knee coil**

  - External Dimensions: L--430mm, W--420mm, H--330mm
  - Patent coil design. The bottom frame fits for the tabletop. One key to lock the coil position (left-right) and to lock the upper part of the coil, that ensures the consistency of the coil position during the scanning and reduces artifact.
  - The patent coil design of internal knee support fitted physiological curvature, that enable to complete the scans of the meniscus and cruciate ligament under normal physiological curvature, and to ensure the scanning comfort of the positive cases and reduce the artifact.
  - Coil designed to fit the physiological angle of the foot and ankle, that enable scan of the part can be done without configuration of ankle coil. The coil can provide good fixation of ankle part, so that to reduce the motion artifacts.

- **8-channel shoulder coil**

  - External Dimensions: L--480mm, W--520mm, H--310mm
  - 11 receiving elements, to satisfy the requirement of large field of view of shoulder scan, and extend to the axillary lymph nodes, ribs and part of the lung coverage.
  - 3D adjustable upper part, well -embraced shoulder coil will get high SNR images and improve patient flow.
  - Dust cap and fully embedded contact design, extend the life cycle of the coil, and ensure the consistency of image quality.

- **Customization service is available on customer request, e.g. Multifunction Coil, Breast Coil, Ankle Coil, Hand and Wrist Coil, Coils for Infant, Carotid artery coil, etc...**

16 channel receiving coils available for system upgrade (Optional). (require hardware upgrade of spectrometer to 16-channel)

- **16-channel Head Coil (Optional)**

  - Open design of wide windows, for better examination experience.
  - Ergonomic design of concave head support improves patient comfort.
  - Ultra-large imaging field, allows one scan to cover from head to fifth Thoracic spine.
  - The bottom frame fits for the tabletop, ensuring the coil can be well placed at the iso-center of magnetic field.

- **16-channel flexible body coil (Optional)**

  - Hard bottom flexible coil design which is with WDM invention patent, equipped with long endurable flexible belt, acquiring high reliability of fixed coil as well as better fitness of flexible coil.
  - Flexible coil integrated encapsulation technology. No contact interface, greatly improves workflow and enhances patient flow.

- **16-channel knee coil (Optional)**

  - Patent coil design. The bottom frame fits for the tabletop. One key to lock the coil position (left-right) and to lock the upper part of the coil, that ensures the consistency of the coil position during the scanning and reduces artifact.
  - The patent coil design of internal knee support fitted physiological curvature, that enable to complete the scans of the meniscus and cruciate ligament under normal physiological curvature, and to ensure the scanning comfort of the positive cases and reduce the artifact.
  - Coil designed to fit the physiological angle of the foot and ankle, that enable scan of the part can be done without configuration of ankle coil. The coil can provide good fixation of ankle part, so that to reduce the motion artifacts.

More receiving coils available as Optional.

- **Shoulder Coil (soft design, 8-channel)**

  - External Dimensions: L--280mm, W--270mm, H--270mm
  - Patent design
  - Excellent coverage and fit for the shoulder of different patients, minimize the volume ratio and effectively improve the imaging SNR.
  - The soft coverage design improves the patient's comfort, much better experience for long time scanning of patients with shoulder disease.
  - The flexible design of both wings is extended to meet the needs of simultaneous scaning of shoulder joint and axillary lymph node.

- **Mammo Coil (8-channel)**

  - External dimensions: L--370mm, W--450mm, H--210mm
  - In view of the characteristics of breast disease, in addition to the breast, the imaging area covers the axillary lymph nodes and pectoralis major muscle.
  - Ergonomic comfort kit provides comfortable support to head, abdomen and lower limb.

- **Multi-functional flexible coil (8-channel or 16-channel)**

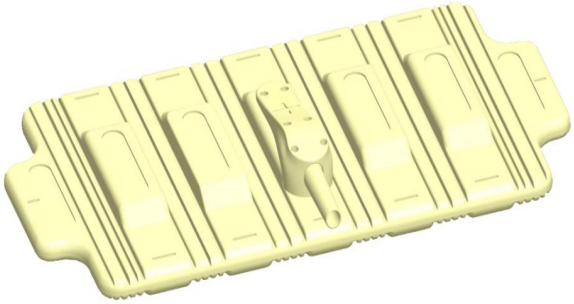

  - External Dimensions: L--370mm, W--535mm, H--25mm
  - Flexible and integrated design, provides ease of use.
  - can be used for clinical scanning of an uncommon position, or as substitution of other receiving coils.

- **Ankle coil (8-channel or 16-channel)**

  - External dimensions: L--320mm, W--240mm, H--350mm
  - Coil base matched with the tabletop, enable an easy placement of the coil.
  - One key to lock the coil, easy to operate.
  - Foot bracket and supporting accessories ensure that the foot and ankle are scanned under normal physiological and functional curvature.
  - Better fixation to reduce the motion artifacts during scanning, while patient is relaxed and more comfortable.

- **Hand and Wrist coil (8-channel)**

  - External dimensions: L--320mm, W--210mm, H--120mm

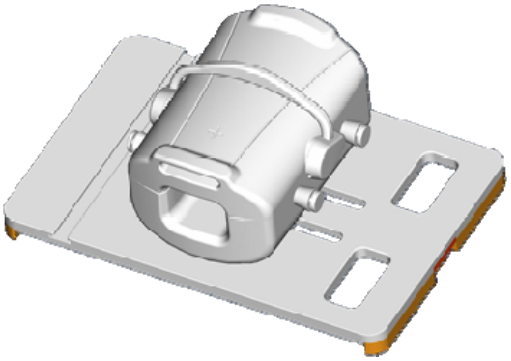

- **Infant central nervous coil (8-channel)**

  - External dimensions: L--650mm, W--270mm, H--270mm

- **CTL-spine coil (12-channel)**

  - External dimension: L--1170mm, W--380mm, H--215mm

Spectrometer and Electric System

The spectrometer is the most important core component of the magnetic resonance imaging system with the highest technical content. The top-level magnetic resonance manufacturers own the technology of spectrometer.

WDM self-developed full digital 8-16 channels spectrometer, adopts LVDS high speed serial transmission technology and FMC high speed data transmission connection technology with strong extendibility. The A/D conversion and quantum laser modulation are placed inside the magnet room, which significantly reduces signal loss and avoids interference during transmission. As a result, the image quality is effectively improved.

- Number of receiving channel：8-16 channels, FMC technology allows extension of any number of channel
- Modulation mode: frequency, phase and amplitude modulation
- Resolution of RF frequency and phase: 48bit and 16bit
- Updating rate of RF and gradient waveform: 1us
- Gradient output channel : X, Y, Z, B0
- Gradient Pre-Emphasis: 12 groups of direct terms and cross terms for eddy current compensation
- Homologous phase coherence technique: phase fluctuation ≤ 0.01°
- Digital dynamic range extension technology: effective 32 bit
- Optical fiber technology: optical fiber acquisition, fiber gradient, no interference, small attenuation, simple connection and reliable performance.

Computer Control System

Host Computer

Host computer with dual screen and Intel CORE processor 3.2G or higher CPU for overall system control and processing, allowing simultaneous operation of Patient registration/pre-registration, MR scanning and imaging, Image reconstruction, Image review, reporting, print and etc. greatly enhanced patient throughput. 500 GB or higher hard disc is used for system software and data storage. CD/DVD RW for data archive, backup and transfer.

- CPU: INTEL CORE processor 3.5 GHz or higher
- Memory (RAM): 4 Gbyte or higher
- Hard Disk: 1 TB or higher - stores up to 6,000,000 images of 256 x 256
- Image Archiving: CD/DVD-RW
- Operating System: Windows® 10 Professional
- 21 inches 2M pixel medical LCD (1600×1200)
- 24 inches LCD Display (1920×1200)
- Graphical Interface: Windows based
- Networking: DICOM 3.0 Storage, query, Send, Print and Worklist

NOTE: Customer will be required to provide cabling, appropriate interface devices, and network connection from the operator console to the viewing location. Customer is also responsible for all telephone, network and/or internet service provider charges. Contact WDM for specific requirements and recommendations.

Operator's console

The i_Space 1.5T is designed for operation by a single operator. Patient administration and scan control, image data viewing and transfer, image processing and printing, system control can be performed with user-friendly and intuitive interfaces. Simple mouse clicks enable routine actions, allowing high patient throughput and operator comfort. The Operator's Console comprises:

- A desktop with space for host computer and paperwork
- Dual screen host computer with Microsoft Windows 7 based operating system for efficiency and ease of operation.
- Intercommunication system including desktop voice communication system, volume control of microphone, speaker and headphone, and connectivity of stereo music system.

iPad Review and Control (Optional)

iPad or iPhone with WDM developed application, enable doctor to check and control system scanning and reviewing and mobile PACS functions. For patients with claustrophobia or need special care, ipad/iPhone application enable doctor to operate the system in scanning room, so that to give more attention and care to patient. Moreover, through mobile NETWORK the system supports teleconsultation and remote diagnosis.

Software Description

The software package is intended for use with Magnetic Resonance Diagnostic Imaging Systems – i_Space 1.5T. The main software, which called To-Station, will help operators and physicians to step patient registering, system adjusting, 2D & 3D image acquisition, processing, analyzing and storage, it also integrates image enhancement, DICOM printing, etc.

Software Package

- Scanning control software
- Patient registration software
- 3D pilot positing software
- Worklist service software
- Sequence management software
- Image reconstruction software
- Image processing software
- Image measurement and annotation software
- Image format conversion software (JPEG，BMP, etc.)
- Image review software
- System inspecting software
- Real-time printing software (Standard DICOM 3.0)
- Remote Service Software
- Magnet Monitoring Software

Advanced Features

Multi-language support

Windows OS, multi-task processing, multi-language support.

Patient Pre-registration

Support patient pre-registering when scanning, without limitation to amount of pre-registered patients, improves work efficiency.

9 Slices of Scout Images

9 slices of scout images in three dimensions by one pilot scan in 25 seconds, provides you 3 choices in each dimension, greatly enhance precision of the scan positioning, and enable a high patient flow.

Scout Line

Scout image can be displayed at the lower right corner and the side bar. It makes very simple to know exact slice position, which is significant improved the convenience of clinical diagnosis.

Image Comparison

Provide multi-slices comparison on one screen.

Intelligent Icon Management

Enhance operator's efficiency by customizing interface icons, re-arranging the position of each icon, grouping your icons.

Non-film Capability

A smart image reviewer software called "to viewer" has been integrated into the archive VCD/DVD automatically, which enable to review the archive images in any other PC.

Abundant Sequence Database

Provides Sequences upgrade free of charge.

Sequence library can be customized and categorized by operator to improve workflow.

System provides operator with reference information and will inspect the validity of parameters automatically.

Parameters can be reset to default

Standard DICOM 3.0 Interface

- DICOM Modality Worklist (RIS interface)

  The Radiology Information System Interface option enables automatic transfer of patient information from the hospital's DICOM RIS to the MR Console Operator's Console, thereby eliminating retyping and improving workflow.

  Correct data transfer in the first stage of the MR scan ensures data-integrity and provides the correct association between images and other patient data in the departmental information system or PACS. The functionality is according to the DICOM definitions.

  It provides work lists for predefined time-windows, sorted by time slot and automatic transfer of:

  - Accession number
  - Scheduled procedure step
  - Patient name
  - Patient identification
  - Patient sex
  - Patient weight (if known on RIS)
  - Referring physician's name
- DICOM Query/Retrieve Service Class as a Provider

  Supports database browsing from a DICOM workstation and sends a copy of requested images in DICOM format

  The i_Space 1.5T DICOM conformance statement provides full details on the implementation of the DICOM standard.

GSM Magnet Monitoring Software

GSM Magnet Monitoring System allow technician or engineer to monitor the system status remotely via GSM network. Message will be sent to preset cellphone numbers while magnet cooling system is malfunctioned, that will effectively reduce losses from Helium boil-off.

Imaging Sequences and Parameters

Pulse Sequences:

- Scout image with Spin Echo (3 x 3 scout images, each view has 3 scout images for orientation)
- Spin Echo (SE), T1, T2, proton desity weighted
- 2D Fast Spin Echo (FSE), T1, T2, proton desity weighted
- 3D Fast Spin Echo (FSE), heavy T2 weighted
- Dual Contrast image with FSE
- Gradient Echo (GE)
- T1/T2 weighted image with Gradient Echo
- Fast dephase Gradient Echo
- Fast rephase Gradient Echo
- Fast dephase Gradient Echo with breath hold
- 3D Fast dephase Gradient Echo
- 3D Fast rephase Gradient Echo
- Inversion Recovery (IR), inversion time can be selected
- IR fat suppression
- IR water suppression
- Fat suppression with Fast Inversion Recovery (STIR)
- Water suppression with Fast Inversion Recovery (FLAIR)
- Fat saturation
- Magnetization Transfer Contrast (MTC)
- 2D/3D arterial angiography with time of Flight (TOF)
- 2D/3D venous angiography with Phase Contrast (PC)
- Magnetic Resonance Cholangiopancreatography (3D MRCP)
- Magnetic Resonance Urography (3D MRU)
- Magnetic Resonance Myelography (3D MRM)
- EPI
- Diffusion Weighted Imaging for Brain (DWI)
- Diffusion Weighted Imaging for Body (DWI)
- Apparent diffusion coefficient imaging (ADC)
- Susceptibility weighted imaging (SWI)
- Dynamic enhanced imaging
- (in phase / out phase) Chemical shift imaging
- Accelerated parallel acquisition technology
- Driven Equilibrium technology
- Image homogeneity rectification technology

Advanced 3D MRI software package

- Maximum intensity projection (MIP): a real-time post-processing program for reconstruction of 2D or 3D vascular image
- Multi-planar reconstruction (MPR): a post-processing program for multiple plane reconstruction of 3D data with free choice of slice thickness and spacing. The reconstruction results can be displayed on the monitor or stored in the patient database.

Image Reconstruction:	2D Fourier Transform
	3D Fourier Transform
	Half Scan
Slice Thickness:	2-D: From 0.2 mm to 10 mm, 0.1 mm increments
	3-D: From 0.1 mm to 10 mm, 0.1 mm increments
Interslice Spacing:	Contiguous slices available, system default is 10% slice gap
Slice Orientation:	Transverse
	Sagittal
	Coronal
	Oblique and double oblique
	Off center
Acquisition Matrix:	2-D: from 128 x 128 to 256 x 256
	3-D: from 128 x 128 x 24 to 256 x 256 x 128
Field of View:	5 mm to 500 mm, 1 mm increments
Number of Slices:	2-D: 1 – 256
	3-D: 1 - 500 (maximum 50 slices x 10 slabs)

Imaging Processing and Manipulation

WDM 'ToStation' provides powerful and easy to use image manipulation tools.

Help: Tutorial off-line

Multi-tasking:

- All operations can be performed in parallel.
- Support patient pre-registering when scanning, without limitation to amount of pre-registered patients, improves work efficiency.
- Indicator of background task

Exam Queue:

- Management and planning of scan queue for a complete examination
- Customization of protocols with archiving

Positioning:

- Visualize current image with geometrical references on the scout image
- Graphic positioning by using the mouse

Image Tools (On single image or complete series):

- Window width/level
- Zoom
- Pan
- Rotate
- Mirror
- Measurements
- Distances
- ROI (manual, rectangular, oval), size, media, standard deviation
- Annotation on images
- Comparison of multi-slices on one screen

Database Functions:

- Search (alphabetic, chronological, patient ID, Body part, Sex, Age, etc.)
- Sort
- Archiving and export functions for CD/DVD-ROM

Archiving in CD/DVD: To enable the images archived in CD/DVD can be reviewed in any windows PC, 'ToViewer' – a smart image browser will be automatically burned into each disk

System Siting Requirements (Recommended)

Independent power supply: 75kVA

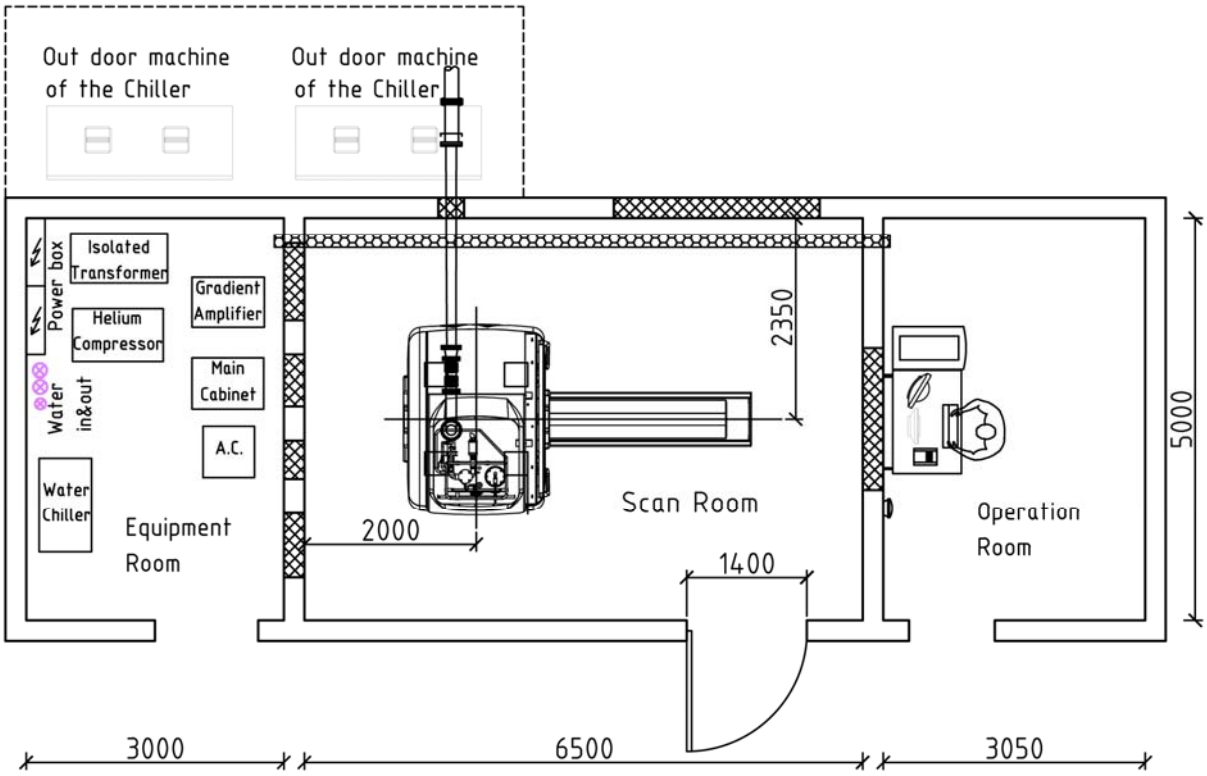

System Configuration

No.	Description		Qty.
1	Super-Con Magnet		1 pc
2	4K Cold Head		1 pc
3	GSM Magnet Monitoring (including Quench Protection)		1 pc
4	Magnet Cover		1 pc
5	Liquid Helium Compressor		1 pc
6	Gradient Amplifier		1 pc
7	RF Amplifier		1 pc
8	Digital Spectrometer	Network Communication Module(NCM)	1 pc
		Data Acquisition Module (MC-DAM)	1 pc
		Digital Control Module(DCM)	1 pc
		Gradient Output Module(GOM)	1 pc
		Digital Optical Fiber Transmission Module (DOTM)	1 pc
		RF Output Module(ROM)	1 pc
		Gain-Adjust RF Amplifier Module(GAAM)	8 pcs
		Power Module	1 pc
9	Receiving Coil	8-channel RF Transmitting/ Receiving Body Coil	1 pc
		8-channel Head Coil	1 pc
		8-channel Cervical Coil	1 pc
		8-channel Body Flexible Coil	1 pc
		8-channel Flat Lumbar Spine Coil	1 pc
		8-channel Knee Coil	1 pc
		8-channel Shoulder Coil	1 pc
		Coil Driven Box	1 pc
		Coil Power Supply	1 pc
		Coils Interface Module	1 pc

10	Patient Table	Electric Examination Table		1 pc
		Table Control System with LCD Panel		1 set
		Laser Positioning System		1 set
		Mattress and Receiving Coil Pad		1 set
11	*i*_Space 1.5T Workstation	Professional Workstation CPU: Core processor, 3.5 GHz or higher RAM: 4GB Hard Disk: 1 TB		1 set
		16X DVD+/-RW		
		USB Keyboard and Mouse		
		High Performance Graphic Card		
		Operating System: Windows 10 Professional		
		21.3-inch Medical Color LCD (1600*1200)		
		24-inch Color LCD Monitor (1920*1200)		
12	Isolation Transformer			1 pc
13	Water Cooling System (including 10 meters pipe)			1 set
14	Other Accessories	Gradient Coil		1 pc
		RF Power Splitter		1 pc
		Electric Cabinet		1 pc
		Operating Desk		1 pc
		10/100/1000M Network Adaptive Switch		1 pc
		Voice Communication System		1 set
		Respiration Gating		1 set
		Standard Quality Test Model		1 set
		Supporting System	Filter Board	1 pc
			Filter	1 set
			Cables	1 set
			Other Auxiliary Parts Set	1 set
		Operating Manual		1 set
		Nonmagnetic ladder		1 pc

15	Phantom	Phantom (L)	1 pc
		Phantom (M)	1 pc
		Phantom (S)	1 pc
16	RF shielding and inner decoration (for Magnet Room)		1 set

Software Package	Ver.	Qty.
WD-MRCONSOLE Operation Software	V2.0	1
WD-BROKER Information Platform	V1.1	1
WD_PACS Image Archive and Transmission	V1.0	1

No.	Software		Qty.
1	System Software	Patient register software	1
		3D pilot positioning software	
		Worklist service software	
		Scanning control software	
		Sequence management software	
		Image reconstruction software	
		Image viewing software	
		Image processing software	
		Image measurement and annotation software	
		Image format conversion software(BMP,JPG)	
		Multi function image searching software	
		Image DVD archive software	
		DICOM 3.0 printing software	
		System quality assurance software	

2	Pulse Sequence	
Spin Echo And Fast Spin Echo	Scout image with Spin Echo	1
	T1 weighted image with Spin Echo	
	Proton density weighted image with Spin Echo	
	T2 weighted image with Fast Spin Echo	
	Heave T2 weighted image with Fast Spin Echo	
	Proton density weighted image with Fast Spin Echo	
	3D Spin echo	
	3D Fast Spin Echo	
	Dual Contrast image with Spin Echo	
Inversion Recovery	Fat suppress with Inversion Recovery	1
	Water suppress with Inversion Recovery	
	Fat suppress with Fast Inversion Recovery (STIR)	
	Water suppress with Fast Inversion Recovery (FLAIR)	
	Heave T1 weighted image with Inversion Recovery	
	Single shoot fast Inversion Recovery	
Gradient Echo	Scout image with Gradient Echo	1
	T1 weighted image with Gradient Echo	
	T2* weighted image with Gradient Echo	
	Fast dephase Gradient Echo	
	Fast rephase Gradient Echo	
	Fast dephase Gradient Echo with breath hold	
	3D Fast dephase Gradient Echo	
	3D Fast rephase Gradient Echo	
	SSFP Gradient Echo	
	In/Out phase Gradient Echo	

Echo Planar Imaging	Single shoot EPI		1
	Multi shoot EPI		
	Spin Echo EPI		
	Gradient Echo EPI		
3	Angiography	2D TOF	1
		3D TOF	
		CE MRA	
		PC MRA	
4	Water Imaging	MRCP	1
		MRU	
		MRM	
		I.A.C	
5	MTC		1
6	Movement compensation		1
7	Flow compensation		1
8	Multi slice multi angle imaging		1
9	Echo navigation		1
10	3D partial shimming		1
11	SENSE parallel acquisition		1
12	GRAPPA parallel acquisition		1
13	Chemical shift saturation		1
14	Tracking pre-saturation		1
15	Water Fat Separation (Dixon)		1
16	Fat Suppression		1
17	Propeller K-space acquisition		1
18	Driven Equilibrium		1
19	Partial K-Space acquisition		1
20	Respiratory Gating		1
21	Off center acquisition		1

22	Acquisition pause		1
23	Pre-acquisition rectification		1
24	Phase over sample		1
25	Variable B value		1
26	Interpolation reconstruction		1
27	Coil sensitivity rectification		1
28	Image homogeneity rectification		1
29	Image Filter Software		1
30	Whole Spine imaging software		1
31	Dynamic enhancement imaging		1
32	In phase / out phase imaging		1
33	Diffusion Weighted Imaging for Brain (DWI)		1
34	Diffusion Weighted Imaging for Body (DWI)		1
35	Apparent diffusion coefficient imaging (ADC)		1
36	Susceptibility weighted imaging (SWI)		1
37	Advanced 3D Pack	MIP	1
		MPR	1
38	DICOM 3.0	DICOM Storage with ToViewer image review software (DICOM files & CD)	1
		DICOM Transmission (to PACS)	1

Optional Configuration	
No.	Description
1	Air Conditioning System (for Magnet Room and Equipment Room)

Optional 16-Channel Upgrade Package	
No.	Description
1	Spectrometer upgrade 8-channel to 16-channel
2	Head coil upgrade 8-channel to 16-channel
3	Flexible coil upgrade 8-channel to 16-channel
4	Knee coil upgrade 8-channel to 16-channel

More Optional Coils	
No.	Description
1	Shoulder coil (soft, 8-channel)
2	Mammo coil (8-channel)
3	Multi-functional flexible coil (8 or 16-channel)
4	Ankle coil (8 or 16-channel)
5	Hand and wrist coil (8-channel)
6	Infant central nervous coil (8-channel)
7	CTL-Spine coil (12-channel)

Warranty

12 months warranty from the date of system acceptance.

Standard warranty includes:

- Technical support through internet and telephone
- Remote system diagnosis and service
- Overall system examination by end of warranty period
- If necessary to deliver spare parts at free of charge and to dispatch WDM engineer to the site at free of charge.
- Service terms after warranty: Service will be provided to customer after Warranty ends on comprehensive service contract or by Paid visit and spares, as desired by Hospital. However, comprehensive service contract can only be signed before expiry of warranty, or customer may need to pay for a visit of WDM engineer to check the system on-site.

Customer is obligated to provide necessary support including:

- To keep the system console connected to internet;
- To report and descript system malfunction to WDM service engineer;
- To cooperate remote system diagnosis and service;
- To send replaced defective components back to WDM factory in China
- To provide necessary assistance to WDM engineer during on-site service, if necessary to provide tools, labors, technicians and volunteers.